An In-Depth Look at the New Fendt® Momentum® Planter

FENDT

Farmers need to get more return from the land for every dollar, gallon and hour they invest. One of the best ways to get that return on investment is to ensure that every plant has the greatest opportunity to give its most optimal yield. We have to shift from thinking in fields and acres to thinking in terms of inches and how to control the growing environment like never before. In order to meet the yield demands of the future, farmers need to control the elements of the planter that affect plant growth. This means being precise in forming the trench, singulating seed, hitting the right depth and closing the trench—across soil type, terrain and time.

Every season, too many farms are leaving ground unplanted, incorrectly spacing seeds and planting them at improper depths, and spending more time working around their planter's shortcomings than planting. Farmers want and need a planter that works with their realities rather than the other way around.

Effectively planting just 2% more ground, improving the growth of 2% of your population and saving 2 hours of each planting day could make a major difference to your bottom line.

What if we could give you a planter that can successfully plant seeds over contours, terraces and difficult soil conditions by adjusting automatically? What if we could give you a planting system that regularly singulates at 99.5% effectiveness? What if you could adjust and set your depth with ease and confidence? What will an extra hour or an extra day add to your bottom line?

I'm proud to say we have a design that can help you answer these questions.

Momentum is the culmination of the best thinking and technology in the planting world.

Studies show that on the low end, compaction can account for 1.5% yield loss. Now 1.5% may not sound like a lot, but when you put that into bushels and acres, it can quickly add up. The Fendt Momentum planter is the only planter that addresses compaction by the planter; in-line center tandem wheels, automatic tire pressure regulation system, which adjusts tire pressures while in the field, and weight transfer cylinders that automatically lift frame elements—all of which help reduce compaction and improve accuracy.

It also uses legendary Precision Planting® meters, the DeltaForce™ downforce system and a patented vertical contouring toolbar that automatically adjusts for contours. The Momentum planter features farm-focused innovations such as our patented seed depth adjustment, which ensures the depth you set is the one you plant at, season after season, and a simple one button unfold/fold system to save time, effort and frustration.

At Fendt, we are dedicated to providing our customers with excellence, efficiency, quality and Gold Star Customer Care. There's no question the new Momentum planter represents the very best of these values to allow your operation to achieve its highest potential.

Sincerely,

The Fendt Marketing Team

Achieve with
MOMENTUM

Controlling what we can of the seed's growing environment pays off in yield and increased profits. By maximizing performance and efficiency and reducing risk, you can achieve better yields with less time and expense. Momentum pairs powerful technology with practicality to give you greater control of the planting process.

Momentum is designed to get the seed in the right place and correct environment, maximizing its yield potential, by managing four key elements:

- **Delivering high performance**
- **Reducing risk to that performance**
- **Implementing an easy-to- use, efficient, row-by-row operating system**
- **Responding to challenges as they arise in the planting operation**

Patented Vertical Contouring Toolbar

(VCT) maintains the optimum position for row units: in the center of the parallel linkage's range of motion, level to the soil. With almost 16 inches more row unit travel than competitors, the VCT can provide a staggering 65.9 inches of vertical travel.

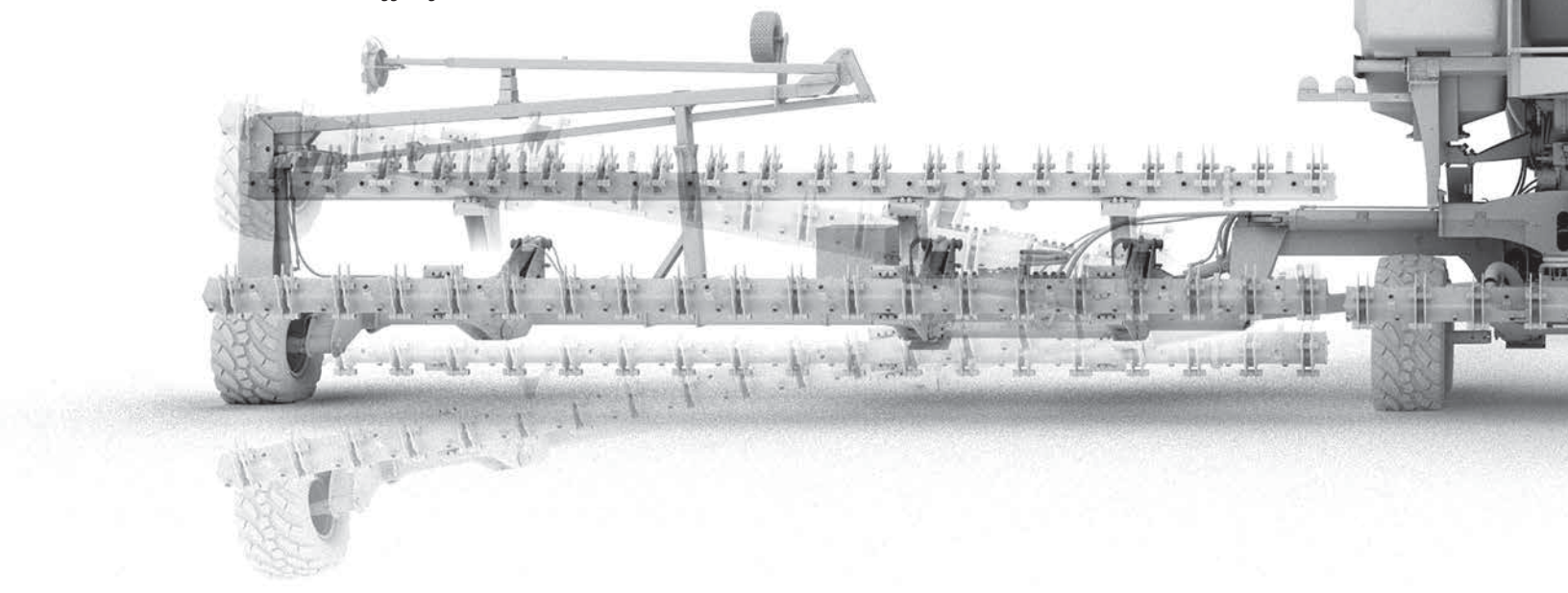

Available Configurations

16 row / 30-inch spacing
24 row / 20-, 22- or 30-inch spacing
32 row / 15-inch spacing
36 row / 20- or 22-inch spacing
48 row / 15-inch spacing

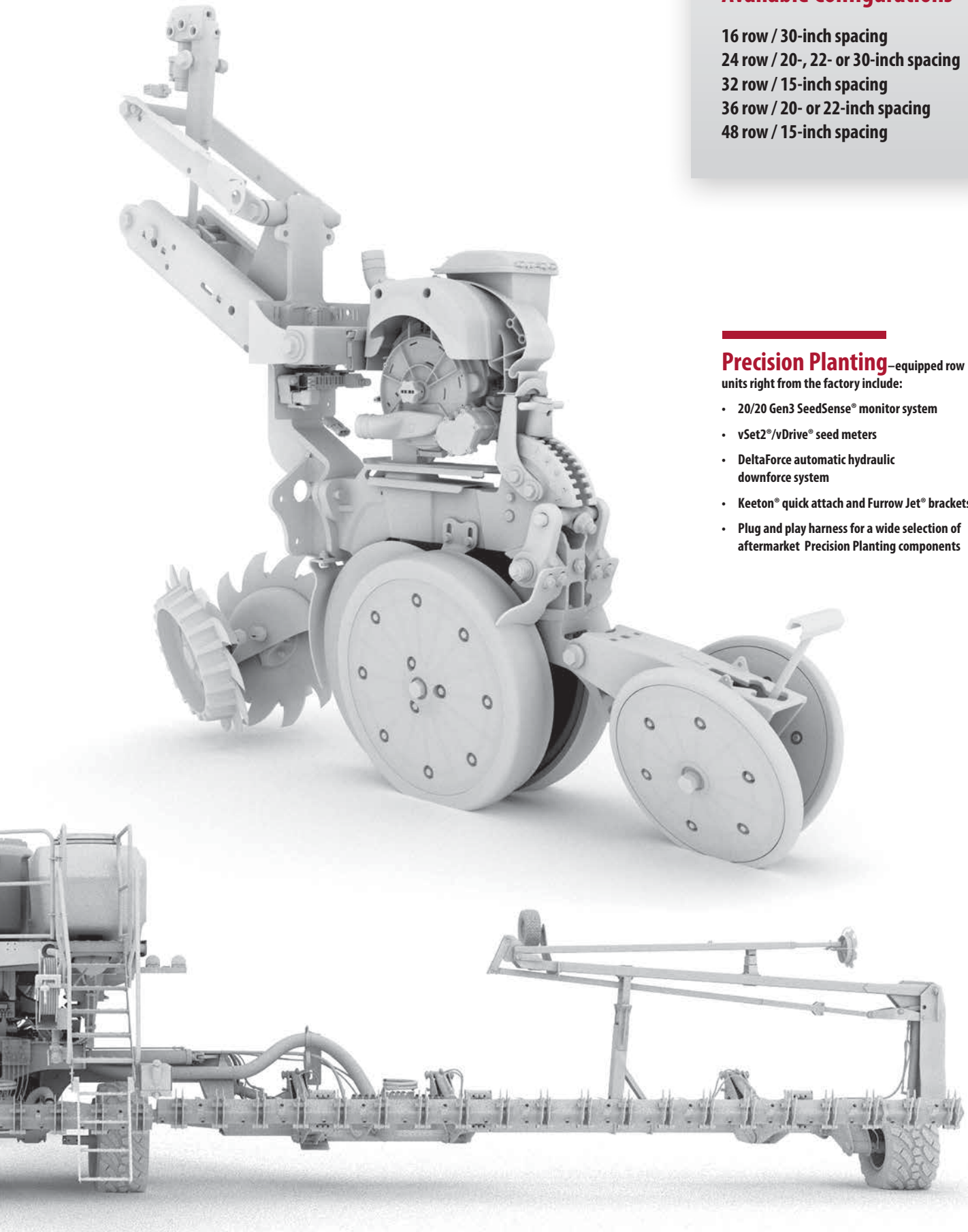

Precision Planting–equipped row units right from the factory include:

- 20/20 Gen3 SeedSense® monitor system
- vSet2®/vDrive® seed meters
- DeltaForce automatic hydraulic downforce system
- Keeton® quick attach and Furrow Jet® brackets
- Plug and play harness for a wide selection of aftermarket Precision Planting components

Managing Weight

Momentum's optional hydraulic weight transfer system may look similar to some competitors', but a cylinder on each wing is where the similarities end. Momentum manages the impact on the soil by automatically controlling both weight transfer and tire inflation. Turn the system on and select between two automatic modes: Load Balance (distribute weight across unit) or Controlled Traffic (shift compaction pressure to follow tractor path).

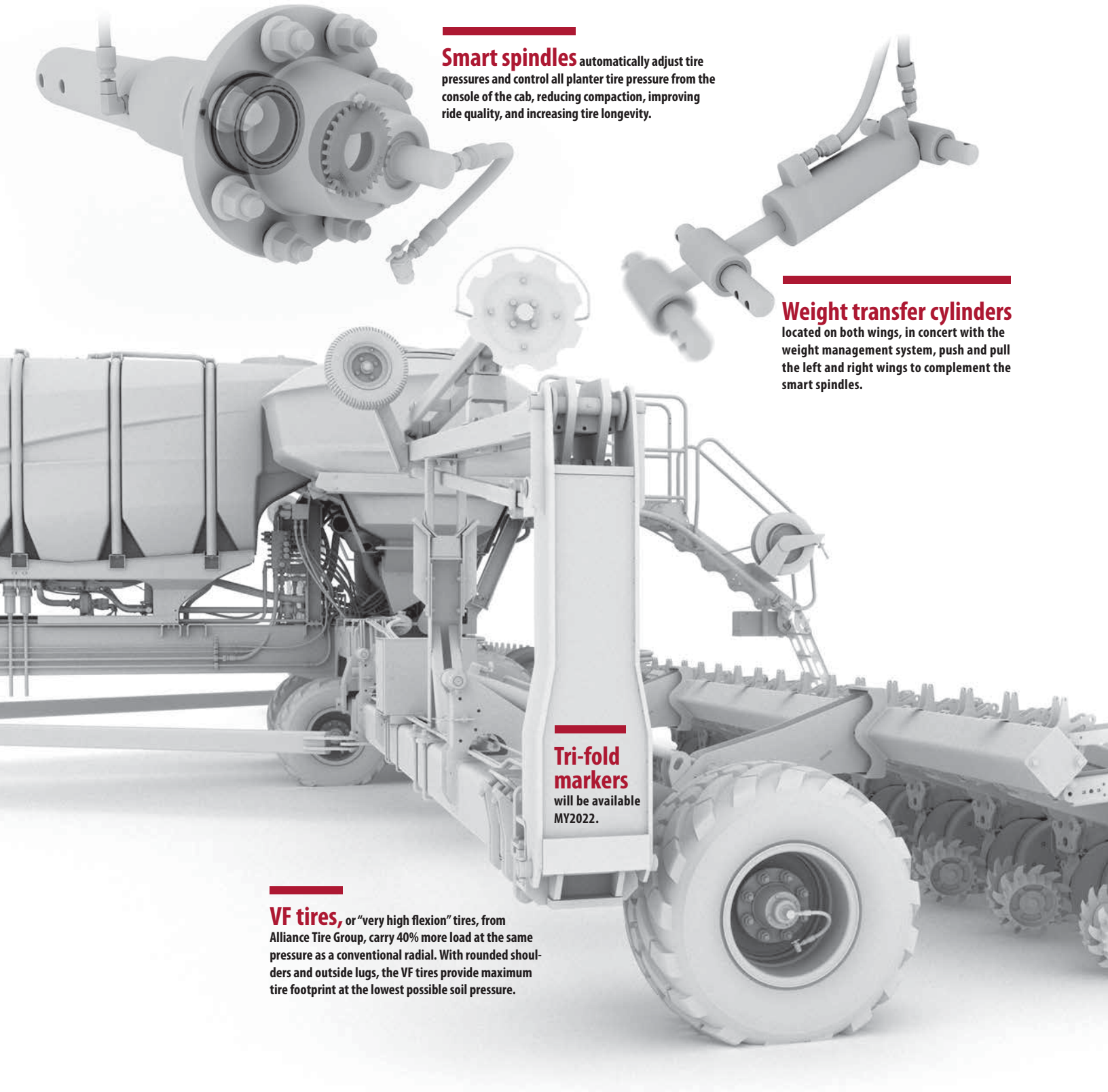

Smart spindles automatically adjust tire pressures and control all planter tire pressure from the console of the cab, reducing compaction, improving ride quality, and increasing tire longevity.

Weight transfer cylinders located on both wings, in concert with the weight management system, push and pull the left and right wings to complement the smart spindles.

Tri-fold markers will be available MY2022.

VF tires, or "very high flexion" tires, from Alliance Tire Group, carry 40% more load at the same pressure as a conventional radial. With rounded shoulders and outside lugs, the VF tires provide maximum tire footprint at the lowest possible soil pressure.

Reducing Compaction

Planter compaction studies have shown up to a 30% yield loss to rows planted between highly loaded/inflated side-by-side dual-wheel configurations. Momentum's VF tires and in-line tandem configuration with single outer wing wheels eliminates pinch rows, allowing you to recapture that lost yield.

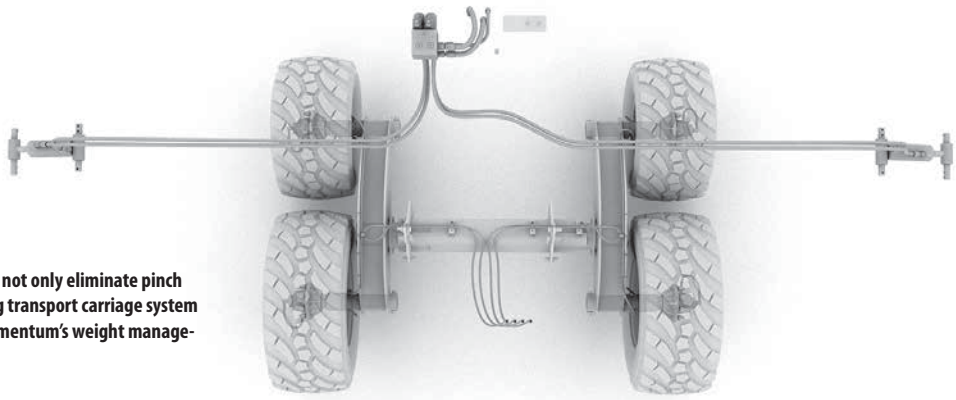

In-line tandems **not only eliminate pinch rows, but the patent-pending transport carriage system is also an integral part of Momentum's weight management and inflation systems.**

Pinch rows **on competitors' planters can affect up to 12 rows, in addition to tractor-affected rows across a 24-row planter. The row below will show decreased yield.**

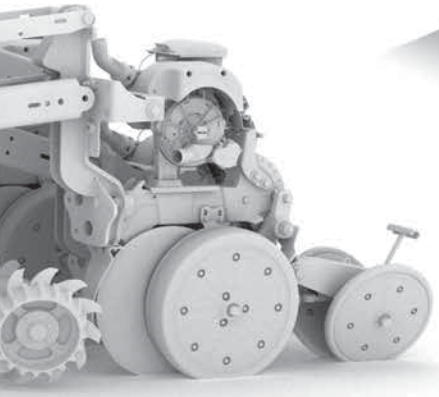

Wheels-front toolbar **provides room for multiple row spacing setups and unrestricted row unit–mounted tillage options.**

Because Not Every Acre Is the Same

A big driver of the performance of Momentum is the Precision Planting–equipped row unit. The system intelligently places seed according to your desired population while compensating for turns and overlaps. vSet2/vDrive meters are unsurpassed in accuracy, simplicity and durability.

The double disc opener is a proven design that delivers a perfectly formed trench—exactly the right growing environment for higher yields.

Precision Planting equipped from the factory

Unique Vertical Contouring Toolbar (VCT) provides unmatched vertical row unit travel and faster headland turns.

Reducing Risk

Farm equipment comes with adjustments, settings and worn parts, and there can be risks to achieving and maintaining peak performance. Momentum is designed to avoid and manage these risks to keep planting precise.

- **Compaction is a liability affecting your yield. Momentum features a unique solution that combines practicality with simplicity. In-line tandem wheels provide excellent load carrying capacity and do not create pinch-row compaction.**
- **Momentum features a series of sensors that link to the Precision 20/20 monitor and deliver the knowledge and control to keep the planter running optimally.**
- **More capacity means less stopping, but managing that extra weight is key. Momentum not only adds capacity but also limits its negative effects.**
- **As planters have become more complex, they've required more complexity from the tractor, limiting the amount of value and technologies farmers could access from their planter. Momentum solves this issue with the Power Beyond system. Multiple frame and fan functions are powered by the Power Beyond hydraulics of Momentum, greatly reducing the number of hydraulic remotes required.**

Precision Planting 20/20 Gen3 SeedSense monitor system

Optional weight management system with two automatic modes minimizes compaction.

Twin, 65-bu. seed tanks with fertilizer options of 1,000 gal. liquid or 12,000 lbs. dry capacities

Responsiveness

What really sets Momentum apart from every other planter is its ability to respond to the situation in the field and turn sub-optimal conditions into optimal ones.

The wheels-in-front design limits compaction risk and allows room for attachments, but it comes with a few challenges. Momentum has a patented design that makes more of the field plantable, with more options and greater efficiency.

Unrestricted row-mounted tillage

Wheels-front toolbar allows for multiple row spacings.

Power Beyond hydraulics greatly reduce the number of hydraulic remotes required.

Farmer Focused

Momentum's design team are also farmers. The planter is designed for efficiency, accuracy and ease of operation. Eliminating required daily servicing and automating many of the traditional operator functions save growers' time and reduce planting anxiety.

Farming with precision is not just about disc openers and seed meters. Much of success and efficiency in planting comes from making it easier to run and maintain the planter. The easier it is to operate and service your planter, the more time you'll save and performance you'll achieve. This planter was envisioned and designed by farmers. Momentum has the kinds of thoughtful additions they want.

Twin 65-bushel seed tanks are steep sloped to allow for complete draining.

One-touch frame folding

Narrow transport dimensions

Toolbar conveniently positions row units for easy access and routine maintenance.

CFS cleanout and onboard air/vacuum system

GOLD STAR

CUSTOMER CARE

The Risk Manager

Fendt's Gold Star Customer Care program helps you manage your variable expenses and your risk. You've invested in the best technology in the industry with Fendt, and we're invested in ensuring your productivity, profitability, and overall experience is the best it can be as well.

- **3-Year Full Machine Warranty***
- **Annual Planter Inspection**
- **$0 Deductible**

**Or 6,500 acres on 40' models, 10,000 acres on the 60' models*

Fendt Momentum Specifications

		FTPM16-30	FTPM24-20	FTPM24-22
Rows / spacing in. (cm)		16R 30 (76.2)	24R 20 (50.8)	24R 22 (55.88)
Hitch on planter				
Metering units				
SeedTube options				
CFS capacity bu. (L)				
Liquid fertilizer gal. (L)				
Est. weight (empty) lbs. (kg.)		23,000 (10,433)	26,000 (11,793)	26,000 (11,793)
Transport width ft. (m)				
Transport height ft. (m)				
Est. tongue weight lbs. (kg)		8,000 (3,629)	9,000 (4,082)	9,000 (4,082)
Tractor HP	**5 MPH**			
	10 MPH			
Hydraulic requirements GPM (LPM)				

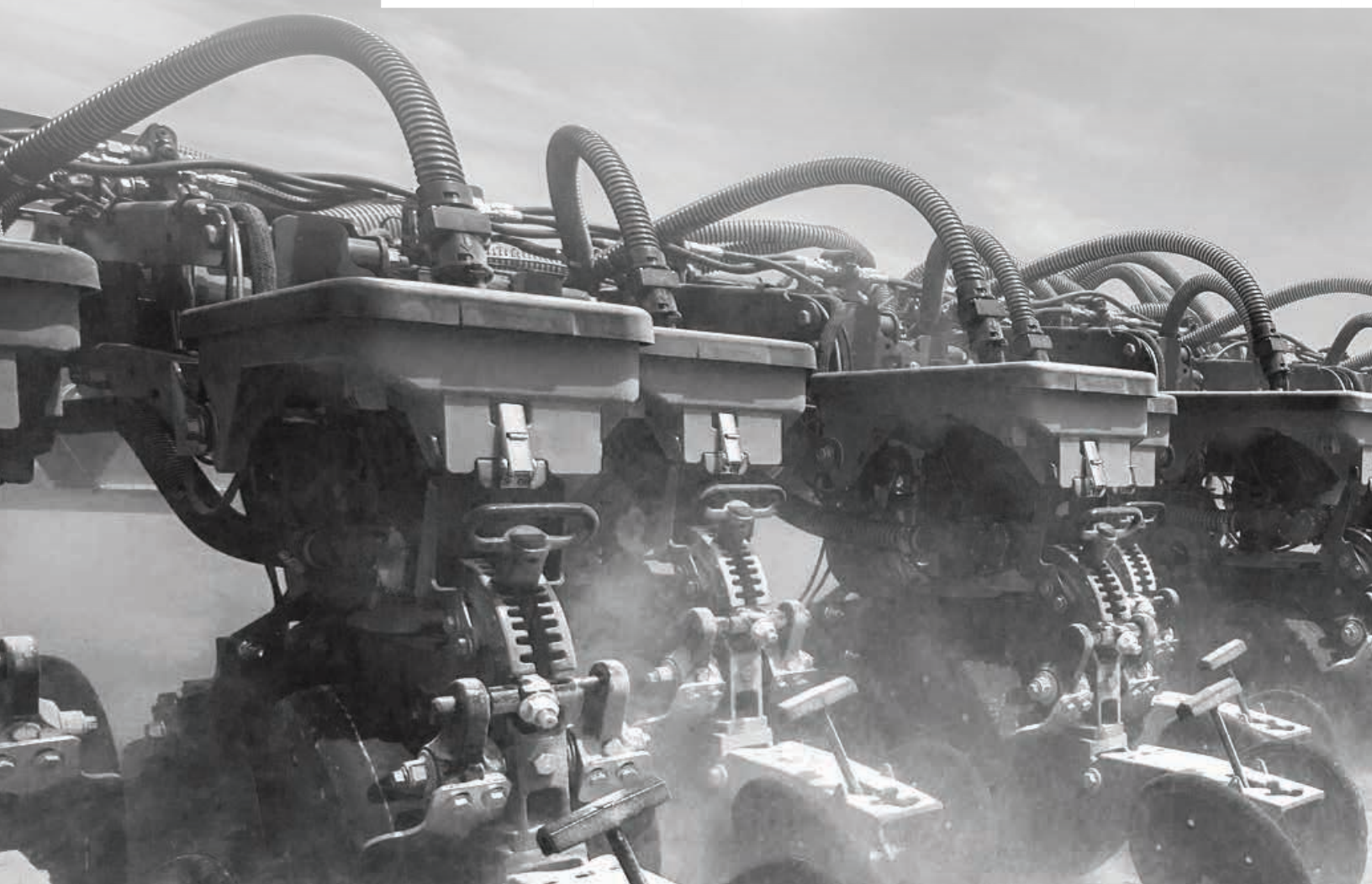

FTPM32-15	FTPM24-30	FTPM36-20	FTPM36-22	FTPM48-15
32R 15 (38.1)	24R 30 (76.2)	36R 20 (50.8)	36R 22 (55.88)	48R 15 (38.1)
2-pt or drawbar				
vSet2 / vDrive®				
Wave Vision SpeedTube				
130 (4,581)				
1,000 (3,785.4)				
29,000 (13,154)	29,000 (13,154)	34,000 (15,422)	34,000 (15,422)	38,000 (17,237)
12 (3.65)				
12 (3.65)				
10,000 (4,536)	10,000 (4,536)	11,500 (5,216)	11,500 (5,216)	13,000 (5,897)
8–12 HP per row 10–20 HP per row				
35–60 (132–227)				

FENDT

fendt.com | Fendt is a worldwide brand of AGCO.

©2020 AGCO Corporation. Fendt is a worldwide brand of AGCO. AGCO and Fendt are trademarks of AGCO. All rights reserved. • FT20B001AG • AGCO • 4205 River Green Parkway, Duluth, GA 30096 • AGCOcorp.com

AGCO may at any time, and from time to time, for technical or other necessary reasons, modify any of the data, specifications or warranty of the products described herein. Some equipment shown may be optional. Attention: Photographs in this publication may show protective shields or guards open or removed for the purposes of illustration. Be certain all shields and guards are in place during operation.